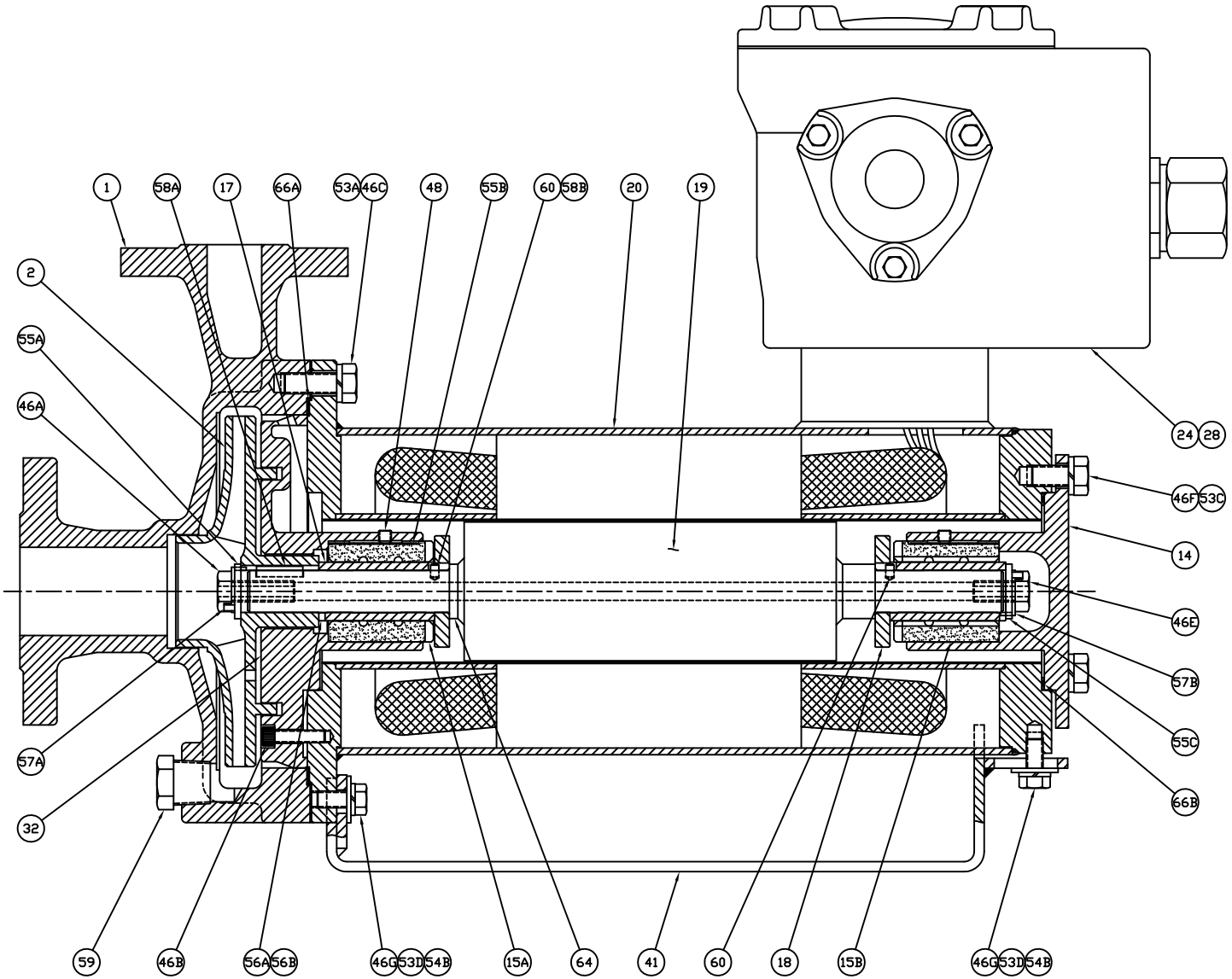

PARTS LIST			
ITEM	QTY.	DESCRIPTION	MATERIAL
1	1	PUMP CASING	316SS
2	1	IMPELLER	316SS
14	1	REAR BEARING HOUSING	316SS
15A	1	BEARING, FRONT	CARBON-GRAPHITE/*
15B	1	BEARING, REAR	CARBON-GRAPHITE/*
17	2	SLEEVE, SHAFT	316SS & H. CR/**
18	2	THRUST COLLAR	316SS & H. CR/**
19	1	ROTOR ASSEMBLY	316SS/316LSS
20	1	STATOR ASSEMBLY	316LSS/HAST C
24	1	TERMINAL BOX	STEEL
28	1	NAMEPLATE W/ SERIAL NUMBER	304SS
32	1	FRONT BEARING HOUSING	316SS
41	1	BASE CRADLE	STEEL
46A	1	BOLT, IMPELLER	316SS
46B	4	BOLT, FRONT BEARING HOUSING	316SS
46C	8	BOLT, PUMP CASING	STEEL/CAD PLATED
46E	1	BOLT, ROTOR	316SS
46F	4	BOLT, REAR BEARING HOUSING	STEEL/CAD PLATED
46G	2	BOLT, BASE CRADLE	STEEL/CAD PLATED
48	2	SCREW, BEARING	316SS
53A	8	WASHER, SPRING LOCK	STEEL/CAD PLATED
53C	4	WASHER, SPRING LOCK	STEEL/CAD PLATED
53D	2	WASHER, SPRING LOCK	STEEL/CAD PLATED
54B	2	WASHER, PLAIN	STEEL/CAD PLATED
55A	1	WASHER, IMPELLER	316SS
55B	2	WASHER, BEARING	316SS
55C	1	WASHER, ROTOR	316SS
56A	A/R	WASHER, ADJUSTING	316SS
56B	1	SPACER (SEE NOTE)	316SS
57A	1	LOCK WASHER, IMPELLER	316SS
57B	1	LOCK WASHER, ROTOR	316SS
58A	1	KEY, IMPELLER	316SS
58B	1	KEY, SHAFT SLV. (3315 MOTOR ONLY)	316SS
59	1	PLUG, DRAIN	316SS
60	2	PIN (QTY. 1 3315 MOTOR ONLY)	316SS
64	1	SPACER (3315 MOTOR ONLY)	316SS
66A	1	GASKET, PUMP CASING	FILLED PTFE
66B	1	GASKET, MOTOR	FILLED PTFE

NOTE: SPACER IS USED ONLY ON THE FOLLOWING MODELS WITH 3315 MOTOR: 0204TF, 0204TG & 0408TG

* OPTIONAL MATERIAL: SILICON CARBIDE
** OPTIONAL MATERIAL: STELLITE, WC

REFERENCE SERIAL NUMBER WHEN ORDERING PARTS

CHEMPUMP
A DIVISION OF TEIKOKU USA INC.
WARMINSTER, PA and BELMONT, WV

UNLESS OTHERWISE STATED: -TOLERANCES TO BE .XX ±.01 .XXX ±.005 FRACTIONS ±1/64 DEGREES ±1/2 -ALL MACHINED SURFACES TO BE CONCENTRIC, SQUARE, OR PARALLEL TO EACH ANOTHER WITHIN .005 -ALL LIMITS IN INCHES

DRAWN AJS DATE 2/11/08
CHECKED DATE
APPROVED DATE
SCALE FULL

TITLE CROSS SECTION DYNAPUMP LE MATERIAL LIST

D DRAWING NO. 65217 REV. 0

NO.	DATE & PRO. NO.	REVISIONS	BY